Standard executions			
Version	Symbol	Code	Item
Pressure-gauges 1/8		024805	AKP60P18
Pressure-gauges 1/4		024806	AKP60P14
Vacuum-gauges 1/8		024803	AKP60V18
Vacuum-gauges 1/4		024804	AKP60V14

New

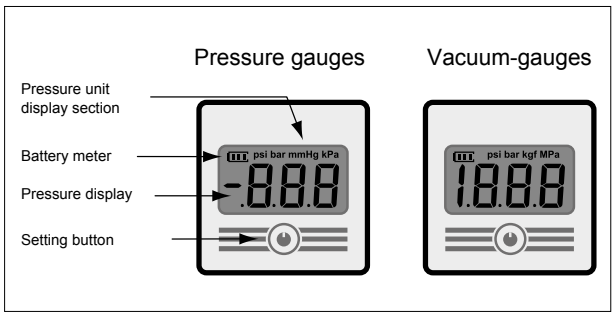

Series of digital pressure and vacuum gauges to detect the pressure in pneumatic circuits.
Pressure reading is easy and fast thanks to the backlight.
These are powered with a lithium battery to simplify installation.
Main characteristics are:
- 6 programmable units to measure pressure (kPa, MPa, kgf/cm2, bar, psi, mmHG);
- Measuring units on display;
- Energy saving mode;
- Protection class IP65;

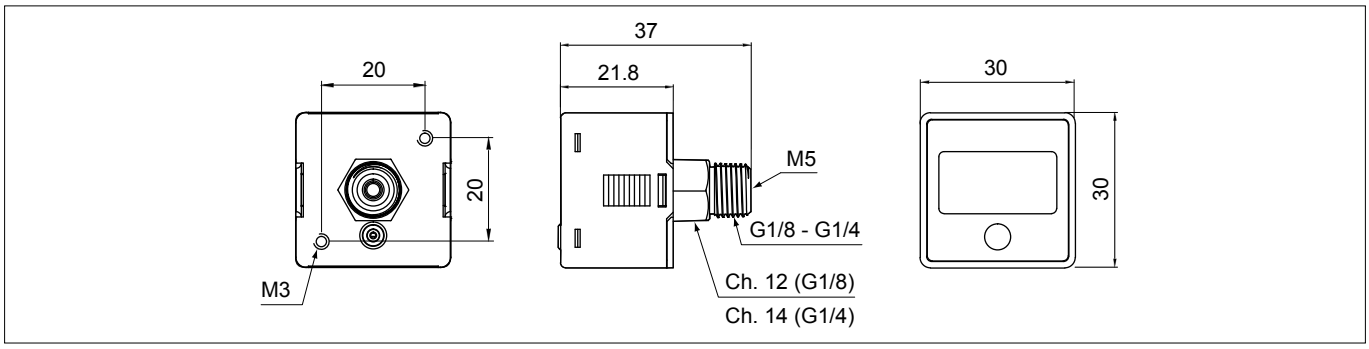

Techinical data		
Fluid	Filtered air, incombustible and non-corrosive gases	
Type	Pressure-gauges	Vacuum-gauges
Rated prassure range (*)	0 ÷ 10 bar	-1,01 ÷ 0 bar
Display pressure range (**)	0,1 ÷ 10 bar	-1,01 ÷ + 0,1 bar
Maximum pressure	15 bar	3 bar
Pressure unit	MPa, kgf/cm^2, bar, psi (user selectable)	kPa, bar, psi, mmHg (user selectable)
Prassure resolution	- 0.001 MPa 0.01 kgf/cm2 0.01 bar 0.1 psi -	1 kPa - - 0.01 bar 0.1 psi 1 mmHg
Repeatibility	≤ ±0.2% F.S. ±1 digit	≤ ±1% F.S. ±1 digit
LCD display	3 ½ digit, 7 segment	
Protection class	IP65	
Temperature range	0 ÷ 50 °C	
Lithium Battery	CR 2032 (battery life 1 year, 5 times/day) low battery indicator on the display	
Dlaplay tum off after	60 sec.	
Ports	G1/8 - M5 G1/4 - M5	
Weight	40 gr	

(*) Nominal pressure: Pressure range within which technical features of pressure/vacuum gauges are granted.
(**) Displayed pressure: Pressure range possible to display on pressure/vacuum gauges. Pressure values displayed can also be off the nominal pressure range and in this case, technical features are not granted.

Version	Code	Item
Bracket	024807	ABT5
“L” bracket	024808	ABT6
Panel adapter	024809	APAC
Panel adapter and front protective lid	024802	APAD

Type:**ABT5**

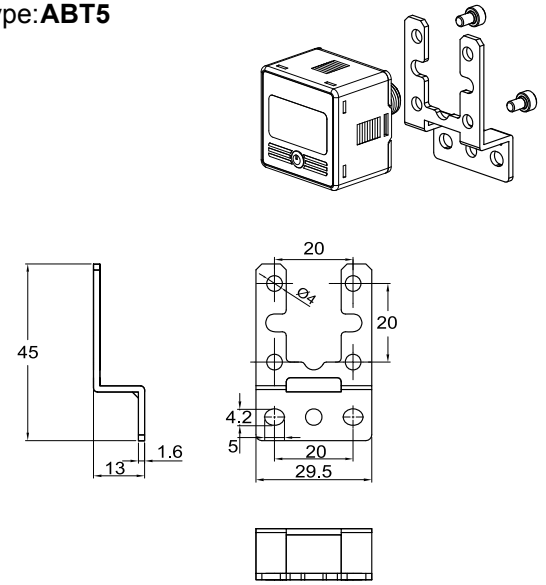

The kit includes 2 screws for fixing the pressure-gauges/vacuum gauges

Type:**ABT6**

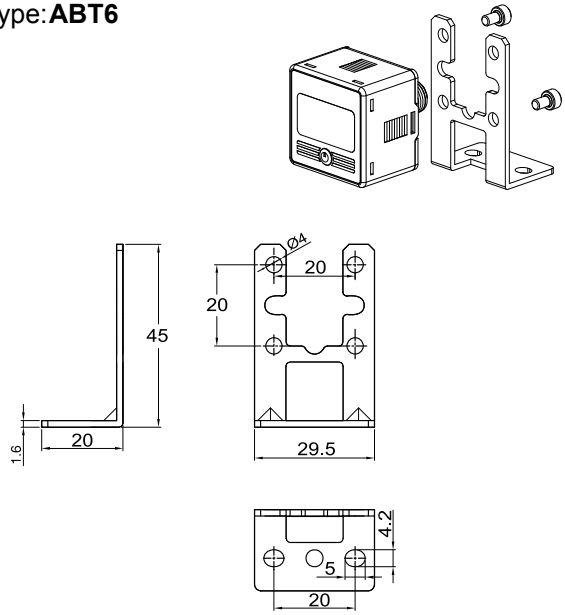

The kit includes 2 screws for fixing the pressure-gauges/vacuum gauges

Type:**APAC**

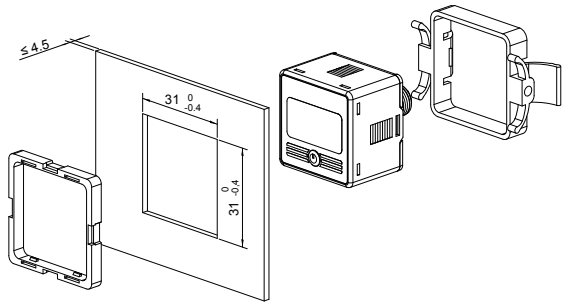

Type:**APAD**

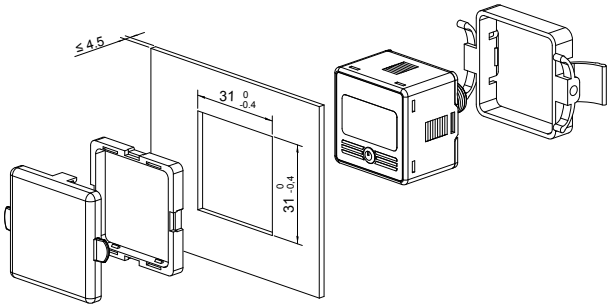

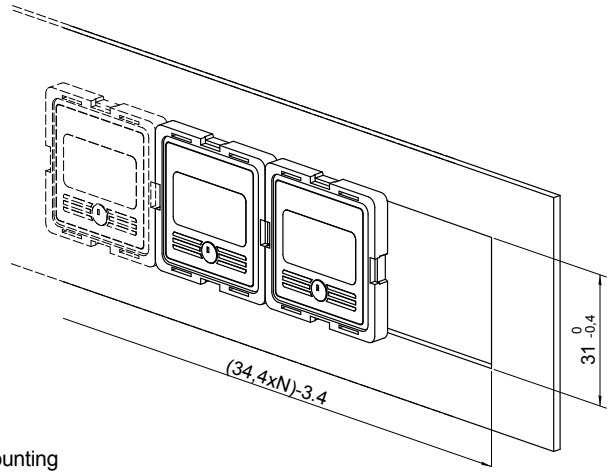

Panel cutout dimension for multiple mounting